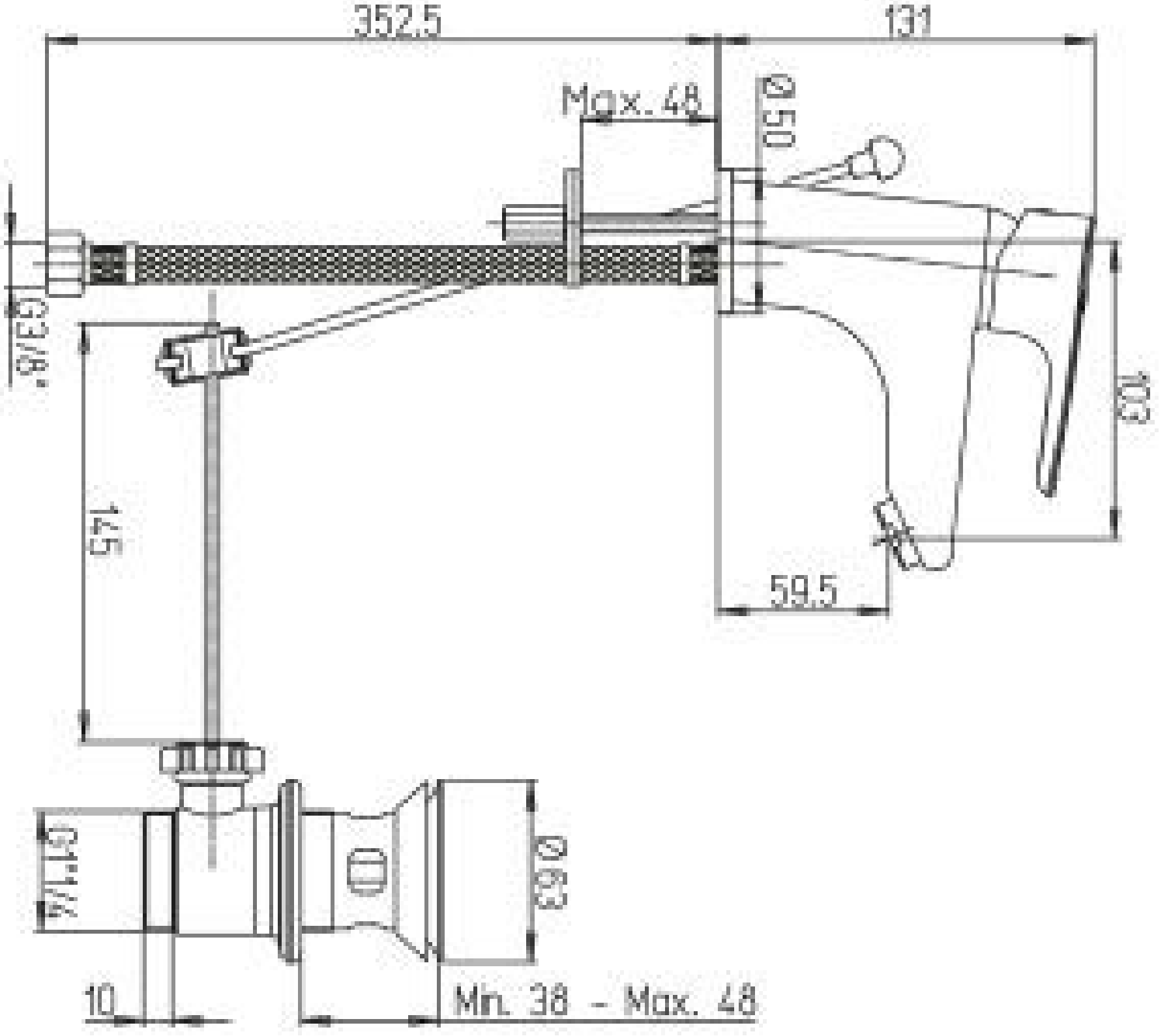
352.5
131
Max. 48
Ø50
G3/8"
103
145
59.5
G1 1/4"
Ø63
10
Min. 38 - Max. 48